3 1151 02675 8932

Library

Johns Hopkins University

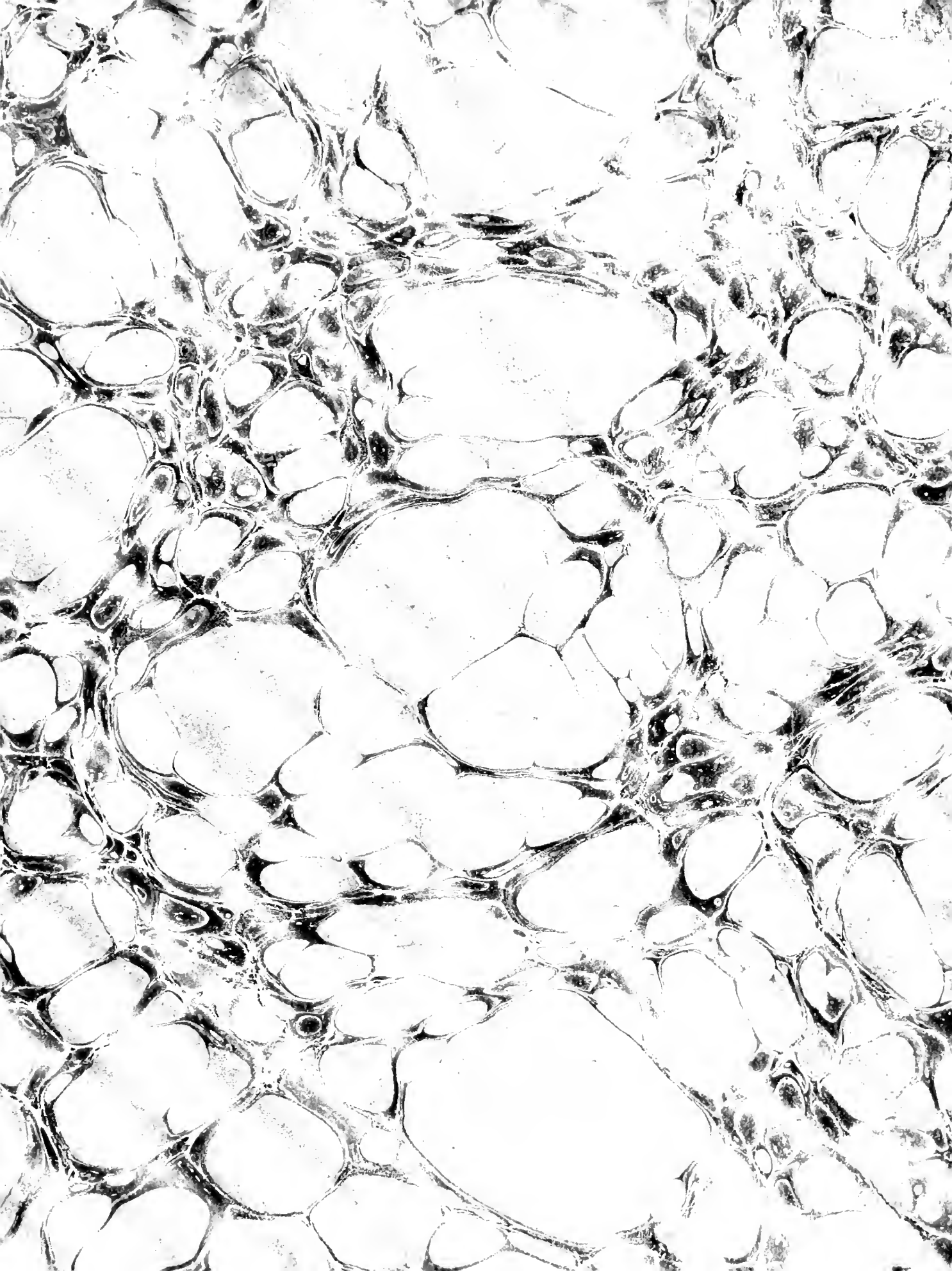

INTRODUCTION.

[illegible] subject [illegible] first [illegible] [illegible] to demonstrate experimentally [illegible] the deflection of [illegible] electrical method, [illegible] electrons [illegible] at first [illegible], but [illegible] moreover [illegible] deflection [illegible] would be led to expect from [illegible] [illegible] of the electron [illegible] [illegible] out, [illegible] the difficulties [illegible] experiments.

Before describing [illegible] it will [illegible] of interest to give a brief [illegible] previous investigations [illegible],[1] [illegible] [illegible]

1. [illegible]

[illegible]

[illegible] magnetic [illegible] $\frac{e}{m}$

[illegible] expressed in grammes.

[illegible] as follows. [illegible] upward [illegible] parallel [illegible] film, [illegible]

[illegible] film would [illegible] application of [illegible] field [illegible]

[illegible] Becquerel [illegible]

$\frac{e}{m}$

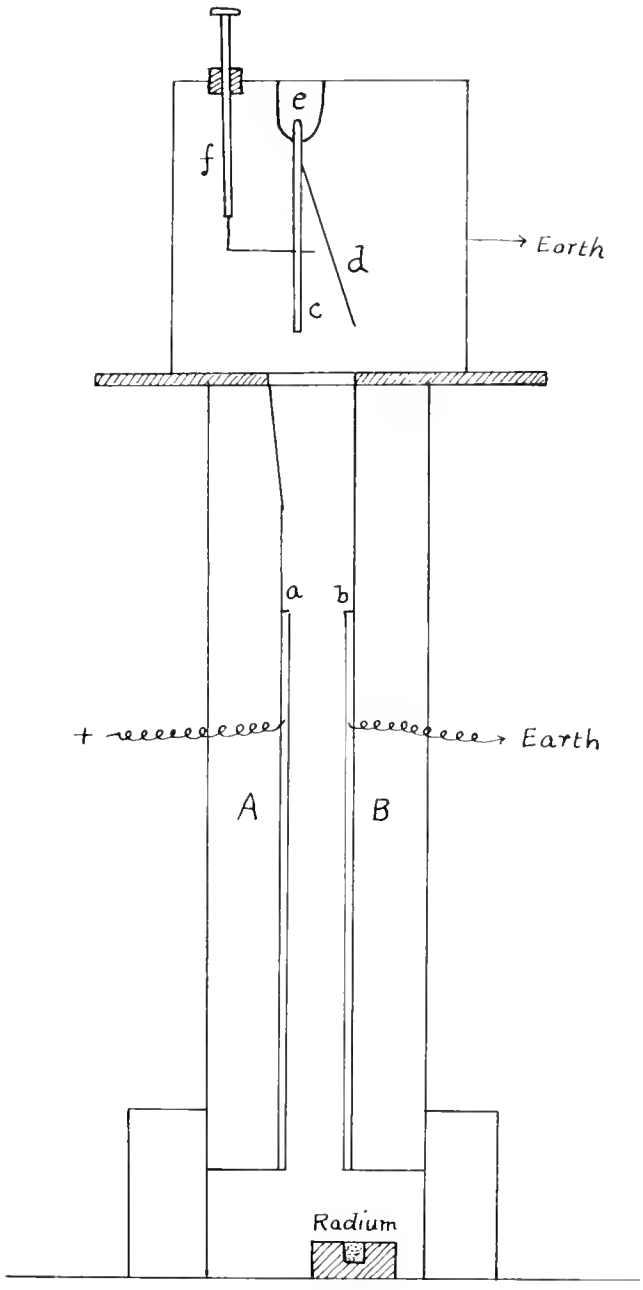

- Fig I -

[illegible] the plate by [illegible] a wire to [illegible] a [illegible] wire to fall fill [illegible] of the [illegible].

Over the top [illegible] was connected to the electroscope, the details of which can be seen in the figure. The rod containing the gold leaf was insulated from the case by means of a piece of amber. The system was charged to a potential of a few hundred volts by means of a rod, which could be turned so as to touch the rod holding the gold leaf, at any time it was desired to discharge which was earthed. The bottom of the electroscope had a thin aluminium window through which the rays could pass. The time which the gold leaf took to fall a given a fixed distance on the cross wire of the telescope was taken as a measure of the ionization. Part of this ionization was due to the β and secondary rays, and part to the γ radiations. and these could be distinguished from one another by means of tests. Of the total about 60% was due to the γ rays and the remainder to β and secondary rays.

To measure the ionization produced by the γ rays the β rays would be directed away from the [illegible]

The expression for the deflection of the ray in a uniform electrostatic field is,-

$$\delta = \frac{X}{m}\frac{e}{V^2} d\left(\frac{d}{2} + h\right)$$

where δ represents the deflection, d the [illegible] travelled by the ray in the field, h the distance from the top of the plates to the electroscope, $\frac{e}{m}$ the ratio of charge to mass of the electron, X [illegible] strength of the electric field, and V the velocity of the electron. In this experiment d = 15 cms., h = 7 cms. and K = 5 x 10^{11} e.m. units.

If we assume for V, and $\frac{e}{m}$ the extreme values found by Kaufmann, viz., 2.65 x 10^{10} [illegible] per sec. and .65 x 10^{7}, the calculated value of the electrostatic deflection for the highest velocity rays amounts to about 11 [illegible] which should have been observed since the width of the window of the electroscope was only 15 [illegible].

This failure to observe the electrostatic deflection could not at first be satisfactorily explained, and it was only after a number of [illegible] of different [illegible] were made [illegible] the true explanation was reached. I shall [illegible] this point later on.

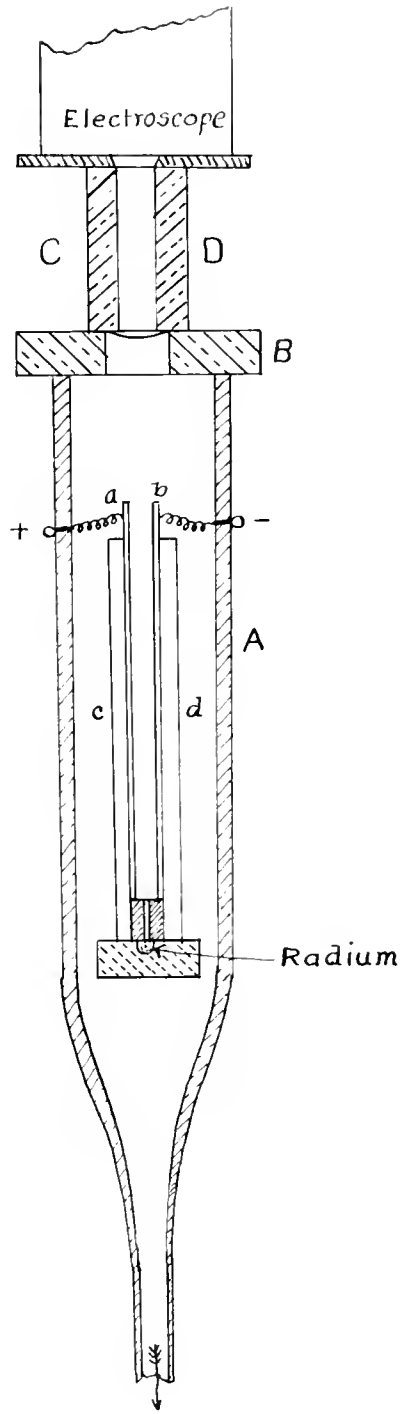

– Fig II –

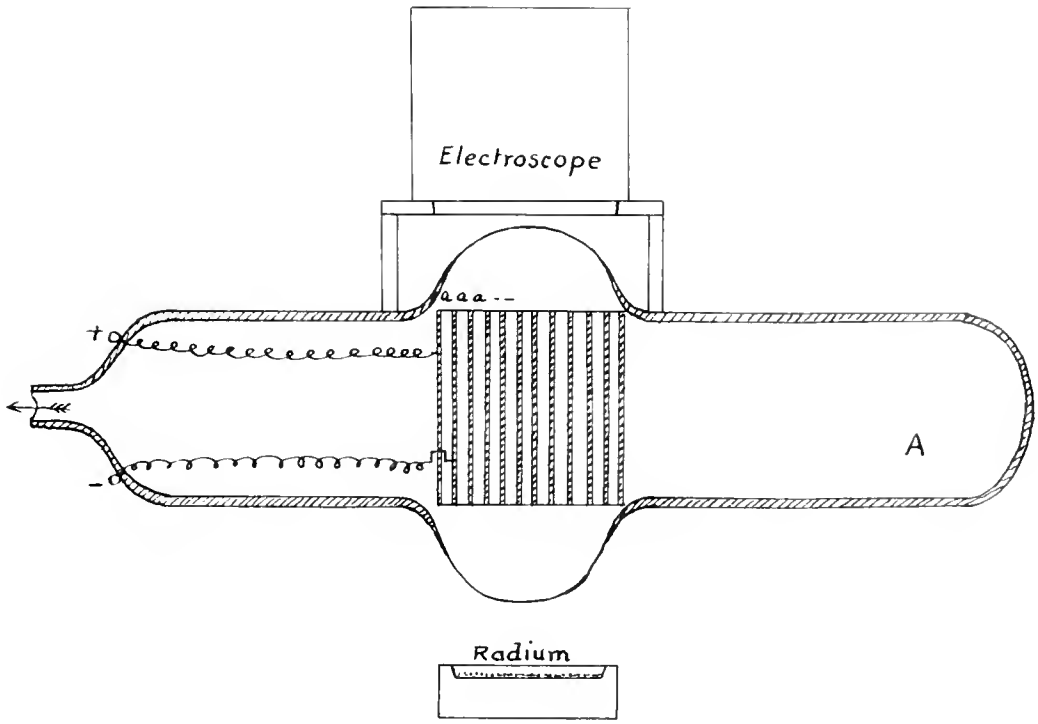

Fig IV

-ties of the deflected [illegible] [illegible] their curves the [illegible] then decided to make [illegible] complete [illegible] [illegible]. Before giving [illegible] [illegible] of the investigation I would like to describe two [illegible] [illegible] the β [illegible] [illegible] the photographic [illegible] 1.

PHOTOGRAPHIC EXPERIMENTS.

<u>Experiment 1.</u> — The arrangement used in this is essentially the same as that used by Becquerel[1] and is shown sketched in fig. 1. Two metal plates [illegible] 1.7 cm. in length were placed parallel to one another in a vertical position [illegible] cm. apart, and insulated by means of ebonite. About 2 cm. below the plates was placed the radium contained in a narrow [illegible] in a block of lead. [illegible] the [illegible] of the radium, [illegible] between the plates was fastened a sheet of [illegible], which extended from the radium up to the photographic plate [illegible]. The plate was wrapped in a sheet of [illegible] paper, and then placed inside a [illegible] [illegible] [illegible] [illegible] [illegible] without [illegible] condition. The distance between the top of metal plates [illegible] photographic plate [illegible].

The [illegible] [illegible] [illegible] [illegible] obtained on the photographic plate [illegible]

1. [illegible]

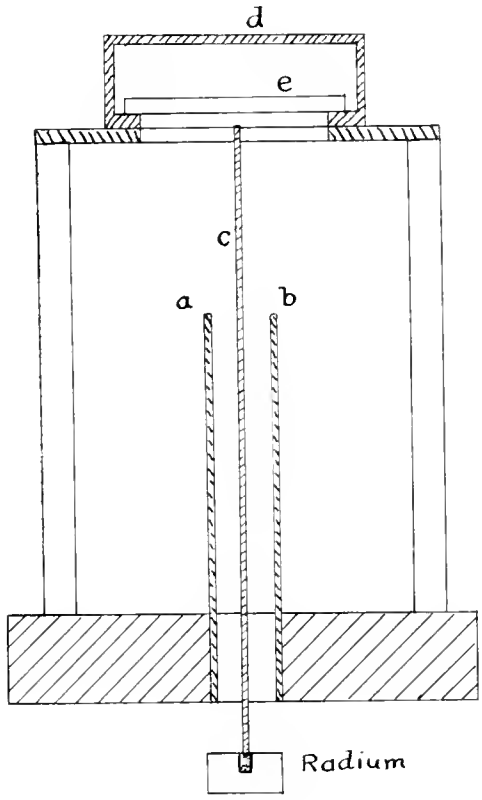

Fig. V.

Fig. VI.

with and without
an electric field.

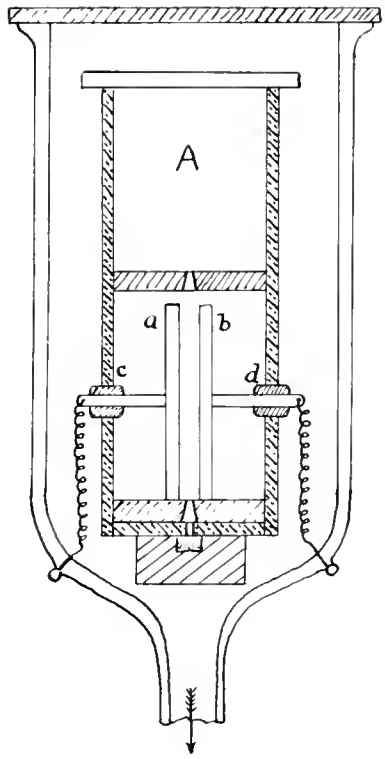

Fig. VII.

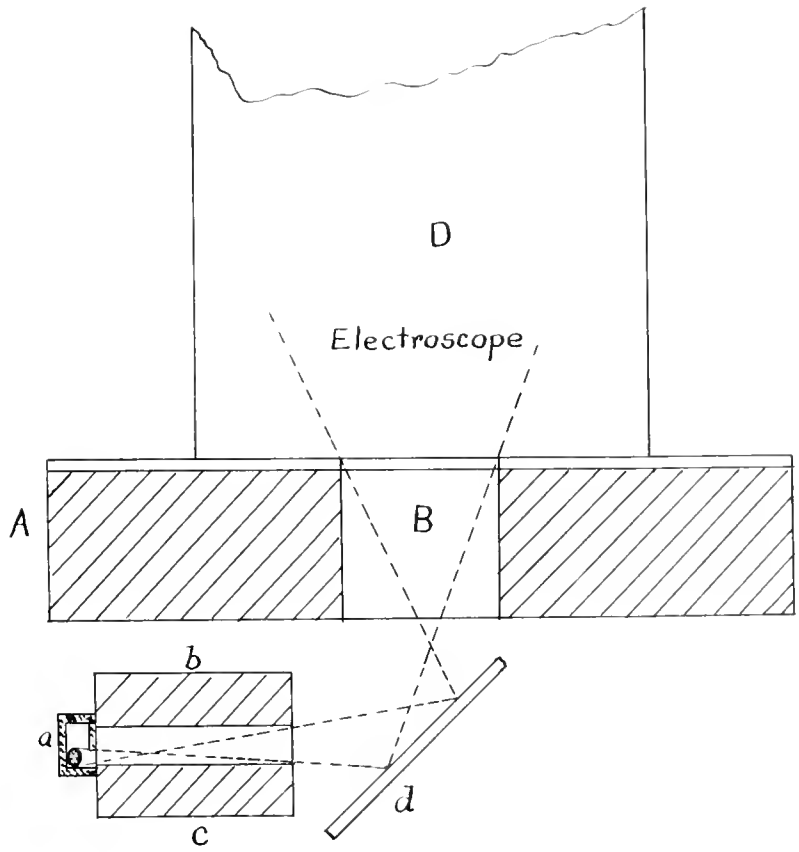

Fig. VIII.

[illegible]

[illegible] B, [illegible] relative [illegible] penetrat[illegible] [illegible] [illegible] [illegible] [illegible] differe[illegible] [illegible] [illegible] is placed so as [illegible] off [illegible] rays, [illegible] of ionization will be due to the secondary rays caused by the rays striking the radiator d.

In table I are shown a characteristic series of [illegible] different radiators, under various conditions

TABLE I.

Radiator - Air and [illegible] 0 [illegible].

Total Rate of Leak.	Rate of Leak due to Secondary Rays.	Absorbing Material.	Unabsorbed Rays.	Remarks.
3.[illegible]1	1.02	0	100	No radiator at [illegible].
3.02	0.[illegible]	[illegible] sheets paper	[illegible]1	Paper placed on
2.94	0.34	8" "	3[illegible]	top of Ver-
2.85	.25	16 "	[illegible]	cury screen.
2.[illegible]0	.10	3[illegible] "	10	
3.28	.[illegible]8	[illegible] "		Paper placed [illegible]
3.2[illegible]	.[illegible]2	0		screen placed [illegible]

Radiator - Zinc.

Total rate of peak.	Rate of peak due to secondary rays.	Thickness of material.	Percentage of [illegible]	[illegible]
10.[illegible]	7.10	0 Paper	100	[illegible] et
[illegible].85	5.75	2 "	31	[illegible]
5.70	[illegible]	4 "	[illegible]	[illegible]
[illegible].11	[illegible]	[illegible] "	[illegible]	[illegible]
[illegible].74	[illegible]	10 "	23	were placed
[illegible].09	.39	24 "	11	[illegible]
3.53	.45	40 "	[illegible]	radiator [illegible]
3.28	.1	[illegible] "	[illegible]	

Radiator - Zinc.

5.00	1.9[illegible]	0 "	100	[illegible]
4.51	1.[illegible]1	[illegible] "	[illegible]	[illegible]
4.15	1.08	[illegible] "	37	sheets of
3.[illegible]0	.70	1[illegible] "	37	paper

Radiator - Zinc.

3.82	0.72	[illegible] "	100	[illegible]
3.59	.49	20 "	[illegible]	[illegible] piece of
3.[illegible]2	.[illegible]	30 "	[illegible]	zinc.
3.[illegible]1	.21	[illegible] "	[illegible]	

	[illegible] of [illegible]	[illegible]	[illegible]	[illegible]	[illegible]
	[illegible]	[illegible]		[illegible]	[illegible]
	[illegible]	.20	0	[illegible]	[illegible]
	[illegible]	.14	100	[illegible]	[illegible]
	[illegible]				
	[illegible]	.00	0	[illegible]	[illegible]
Radiator	4 sheets of Paper,				
	4.96	1.86	[illegible]	100	
	[illegible]	[illegible]	[illegible]	[illegible]	
	[illegible]	[illegible]	[illegible]	31	
	[illegible]	[illegible]	10	15	
	[illegible]	.11	32	[illegible]	
Radiator	8 sheets of Paper				
	5.29	2.19	0	100	
Radiator	1[illegible] sheets of paper				
	5.81	2.71	0	100	
Radiator	2[illegible] sheets of Paper				
	[illegible]	[illegible]	0	100	
	4.80	1.[illegible]0	4	51	
	[illegible]	1.03	[illegible]	31	
	[illegible]	[illegible]	1[illegible]	14	
	[illegible]	.19	[illegible]	[illegible]	
	[illegible]	.13	[illegible]	[illegible]	
Radiator	Glass				
	[illegible]	[illegible]	0	100	
	[illegible]	[illegible]	[illegible]	[illegible]	
Radiator	Lead				
	11.3[illegible]	[illegible]	0	100	
	6.85	[illegible]	[illegible]	[illegible]	

on an average

[illegible]

[illegible] Table II.

[illegible]	[illegible]	[illegible]	[illegible]
[illegible]	[illegible]	[illegible]	[illegible]
1	[illegible]	[illegible]	
4	[illegible]	[illegible]	[illegible]
5	[illegible]	[illegible]	[illegible]
[illegible]	[illegible]	[illegible]	[illegible]
[illegible]	[illegible]	[illegible]	
[illegible]	[illegible]		
[illegible]	[illegible]	[illegible]	
[illegible]	[illegible]	[illegible]	

[illegible]

[illegible] differ [illegible] from [illegible]

[illegible] rays, [illegible]

[illegible]

[illegible] fig. 2 are [illegible]

for [illegible]

[illegible]

secondary rays from [illegible]

paper [illegible] secondary from [illegible]

[illegible]

the secondary from [illegible]

[illegible]

[illegible] curves that the radiations are not homo-

[illegible], but travel at different velocities.

It is well known that a part of the secondary rays are deviable in a [illegible] field, [illegible] same direction as the β rays would be. [illegible] deflection of the secondary rays from lead [illegible] from [illegible], were tried by the method illustrated in fig. 10. The primary β rays from the radium [illegible] in the lead [illegible] radiator [illegible] secondary [illegible] up into the electroscope. [illegible] were

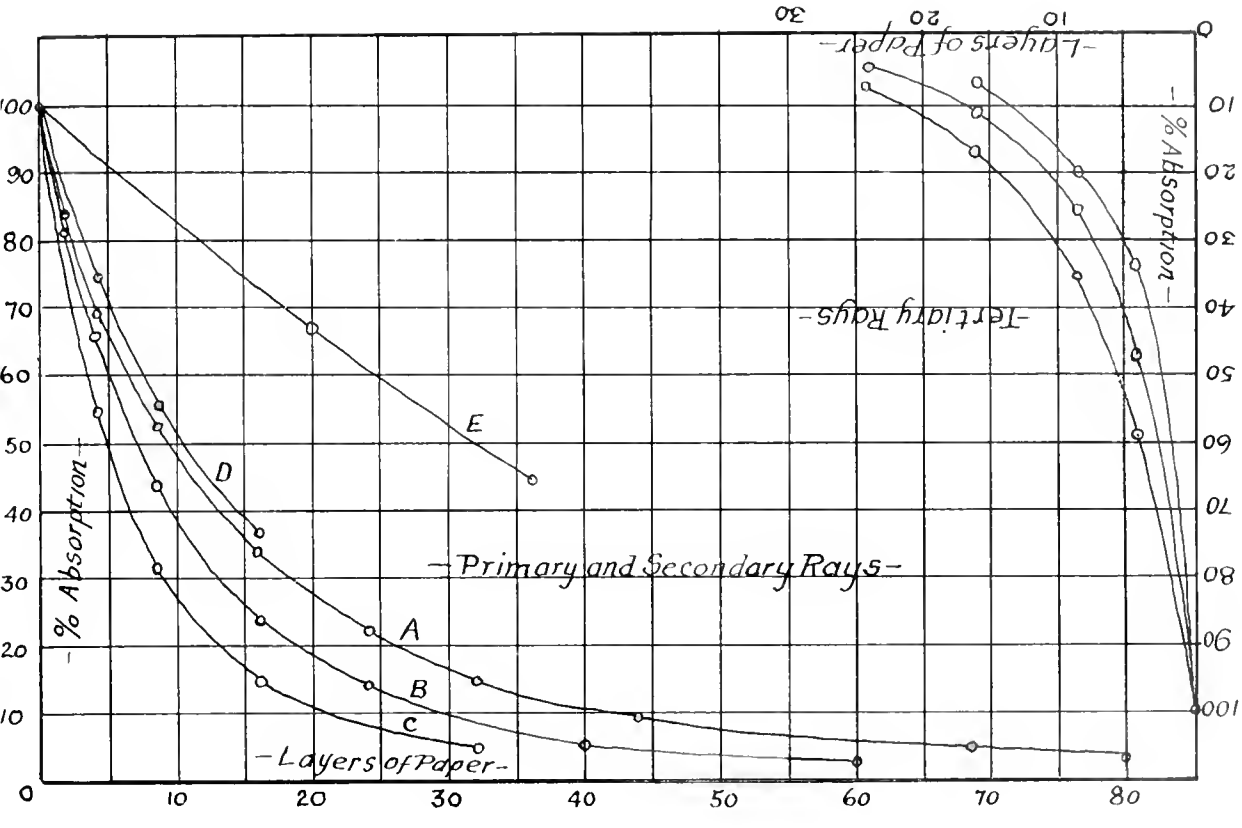
% Absorption
Layers of Paper
Primary and Secondary Rays
Tertiary Rays
A
B
C
D
E
0
10
20
30
40
50
60
70
80
90
100

Fig. IX.

[illegible] placed [illegible] the [illegible] from [illegible]
[illegible] the [illegible] of [illegible] ex-
[illegible] were performed [illegible]
[illegible]
[illegible] produced were [illegible]
[illegible] field [illegible] applied [illegible]
lines of force [illegible] represented [illegible]
of [illegible]
[illegible] table [illegible].

[illegible]

Strength of field	Undeflected [illegible]	
	Lead	Paper
0	100	100
50	[illegible]	[illegible]
160	36	[illegible]
250	21	28
300	[illegible]	[illegible]
350	[illegible]	[illegible]

[illegible] results show [illegible] the secondary radiation from both metals and insulators consist for the most part of negatively charged particles. [illegible] from insulators are more easily deflected than those from the [illegible] dense metals, but the difference is not very great. The proportion of undeflected rays in the secondary rays from paper is greater than in that from zinc.

TERTIARY RAYS.

When the secondary radiation strikes [illegible] object there is produced a third type of radiation called the tertiary rays. [illegible] reported in the

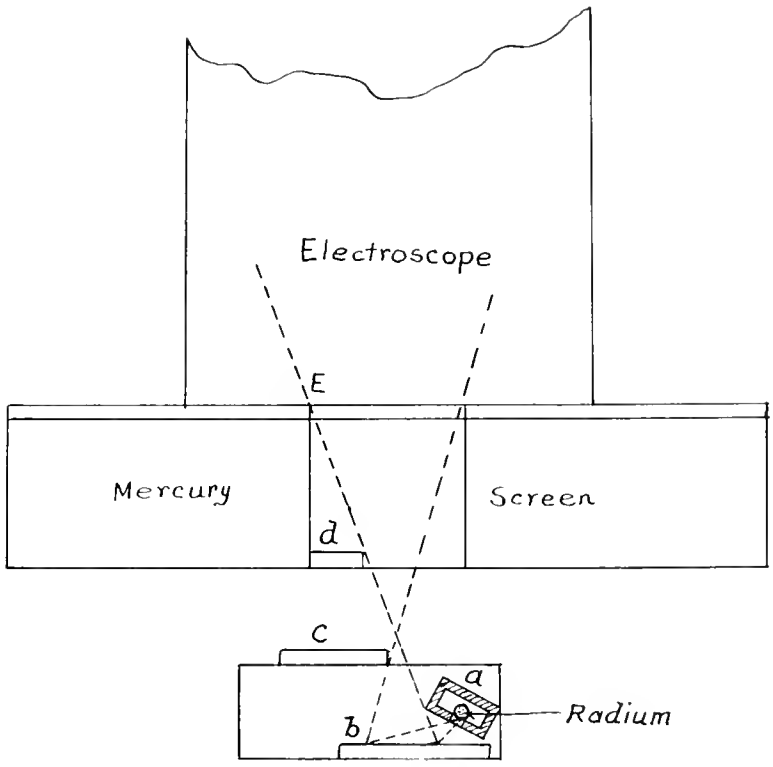

Fig. X.

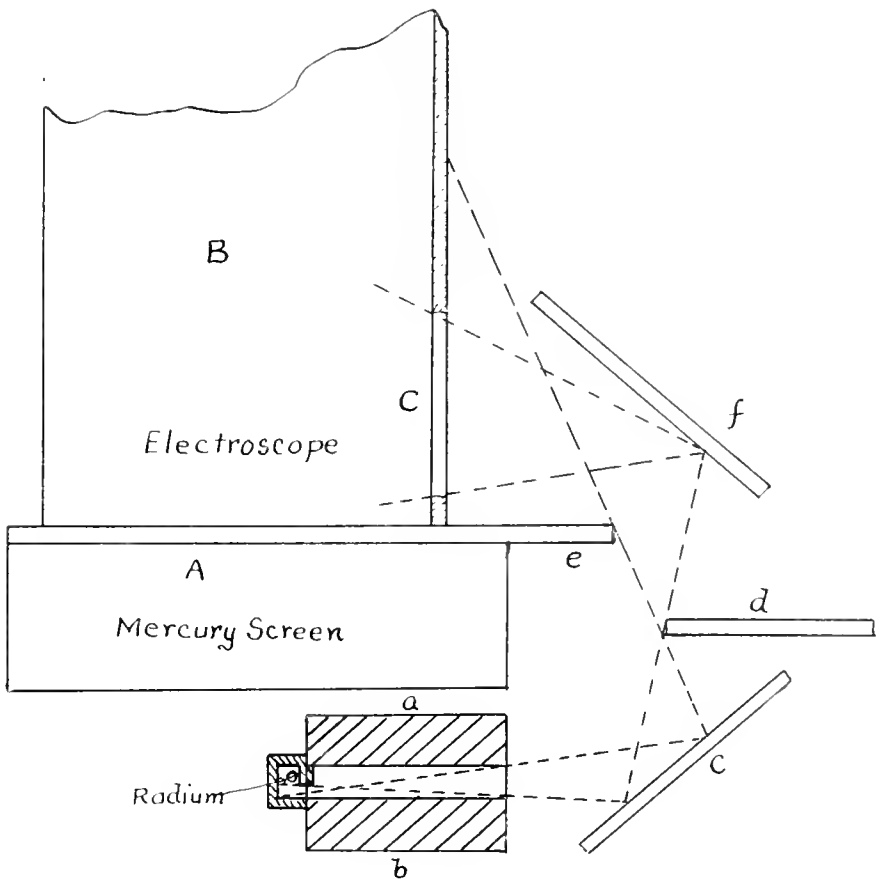

Fig. XI.

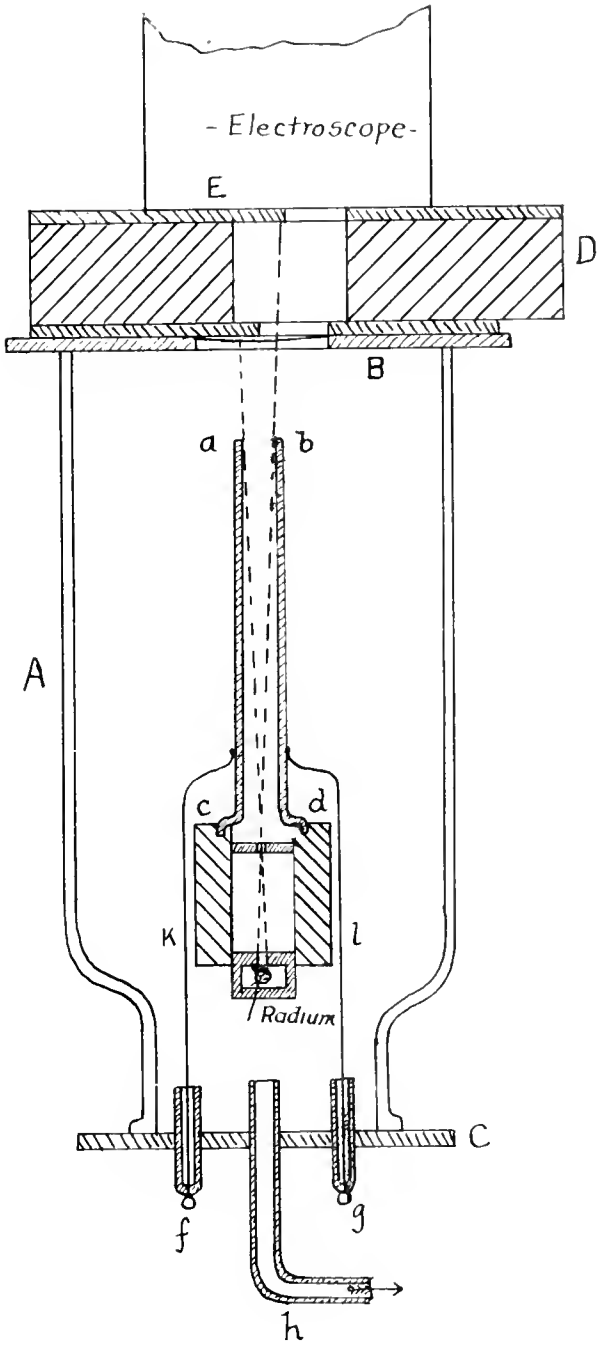

Fig. XII.

[illegible]

[illegible] plate [illegible] ionization increased [illegible] of field, remained constant [illegible] increased. If, [illegible] ionization decreased [illegible]

If the plate [illegible] rays will be deflected [illegible] electroscope, [illegible] this increase will continue until [illegible] have just reached [illegible] the side of the [illegible] into the electroscope. [illegible] it is [illegible] that those rays which after passing [illegible] mica window ~~[illegible]~~ can just affect ionization, are best the most, since all rays of lower velocity, [illegible] ~~[illegible]~~ The same phenomena exactly were observed [illegible] consequently [illegible] velocity [illegible] ray, which [illegible] [illegible] of the electrons [illegible]

P.D.(Volts)	Rate of Leak	P.D.(Volts)	Rate of Leak	P.D.(Volts)	Rate of Leak

$$\frac{mV}{e} \qquad \frac{mV}{e}$$

$$= \frac{2X\,l\left(\frac{l}{2}+h\right)}{H\,d^2}$$

$$= \frac{2X \times 8.4\left(\frac{8.4}{2}+5.5\right)}{17 \times 17 \times H} - \frac{0.563X}{H}$$

$$\frac{mV}{e} \qquad \frac{mV}{e}$$

following [illegible]

Absorbing Layer	X (max)	H (max)	$\frac{mV^2}{e}$	$\frac{mV}{e}$	V cms/sec	$\frac{e}{m}$
[illegible]				[illegible]	[illegible]	[illegible]
of paper	5.7 x10[11]	[illegible]	[illegible]	[illegible]	[illegible]	[illegible]
10 "	[illegible]	[illegible]	[illegible]	1.98	[illegible]	[illegible]
14 "	[illegible]	15.1	5.15	[illegible]	[illegible]	[illegible]
18 "	7.2	[illegible]	[illegible]	[illegible]	[illegible]	[illegible]
22 "	7.7	17.[illegible]	[illegible]	[illegible]	[illegible]	[illegible]
30 "	8.[illegible]	17.9	[illegible]	[illegible]	[illegible]	[illegible]
1.5 [illegible]	[illegible]	[illegible]	[illegible]	[illegible]	[illegible]	[illegible]
[illegible] copper	11.0	[illegible]	[illegible]	[illegible]	[illegible]	[illegible]
[illegible] zinc	[illegible]	27.2	[illegible]	[illegible]	[illegible]	[illegible]
[illegible] "				[illegible]	[illegible] (estimated)	[illegible] *
1.2 "				[illegible]	[illegible]	[illegible]

[illegible] has already been explained [illegible] values given in [illegible] will represent those for both the primary and secondary particles which are [illegible] to be [illegible] [illegible] [illegible] layer [illegible] still [illegible] ionization; [illegible] values of the velocity are [illegible] for the 3 [illegible] alone, since nearly all the secondary particles are [illegible] in [illegible]

* These estimated values were [illegible] [illegible] showing the relation between [illegible] velocity [illegible] $\frac{mV}{e}$.

ε_m

force only equally well [illegible] relatively low, something of [illegible] a priori knowledge. A divergence of [illegible], of the law at high speeds could [illegible] observed.

However [illegible] the results of Kaufmann, together with those of [illegible] lend great weight to the view that [illegible] of the electron is electrical in origin, and increases with the speed.

Velocity and ratio $\frac{e}{m}$ for the secondary rays.

It has been assumed in the previous sections that the velocity of the secondary rays was only slightly less than the primary, and also that they carried the same charge and had approximately equal masses. That these facts are true was proved by the following set of experiments.

The general arrangement of the experiments is the same as that used in the case of the [illegible] and the same drawings and general description will suffice here. The tube of radium, instead of being placed underneath the slit in the lead box, was shifted to one side

[illegible] that no [illegible] lead [illegible] lit was near the right [illegible] lead [illegible] was the case with the [illegible] lead diaphragm was [illegible] its stead [illegible] strip of lead, which covered one third of [illegible] the [illegible] in the lead box could strike full [illegible] left [illegible] zinc plate, but were [illegible] by the strip of lead from falling upon the right [illegible] plate. [illegible] rest of the arrangement was precisely the same as for the primary rays, the opening at the electroscope being [illegible] the secondary rays from the lead box could enter.

[illegible] secondary rays when they strike the left-hand plate, and also the edge of the lead strip produce tertiary rays which travel up with the secondary rays. Great part of these will be absorbed by the mica window but some will get through and cause ionization in the electroscope. There is also [illegible] of secondary rays produced by the rays striking the various parts of the apparatus; these, however, do not affect the results since they come from all different parts of the vessel, and are therefore deflected very unequally.

[illegible]

[illegible] the same phenomena were observed; [illegible] of ionization to a maximum with increasing fields, [illegible] direction [illegible] other. [illegible] were [illegible] [illegible] of ionization above 30 layers of [illegible] [illegible], the thickness being sufficient to [illegible] completely absorb the secondary rays. [illegible] results confirm the idea that the secondary rays have less penetrating character than the primary, [illegible] lower [illegible].

[illegible] electric and magnetic fields [illegible] as for the primary rays. [illegible] necessary to do was to shift the [illegible] of radium [illegible] the lead box to one side so that [illegible] rays could get out. The soft iron screen was placed so [illegible] were shielded from the influence of the field until [illegible] and passed the top of the zinc plate. [illegible] from the top of the zinc plate to the electroscope [illegible] less than in the case of the primary rays, but the width of the opening in the electroscope [illegible]

MV

[illegible] sorbi[illegible] [illegible] 1.[illegible]

[illegible] layer of [illegible] 1.[illegible]

[illegible]

[illegible]

[illegible]

[illegible] The [illegible] limit for [illegible]

[illegible]

[illegible] layer [illegible] paper.

[illegible] $\frac{mV}{e}$ [illegible]

[illegible] obtain 1.29 [illegible]

[illegible] deflected.

[illegible]

= 17.[illegible] [illegible] therefore,

$$[illegible] = \frac{2 \times 8.4\left(\frac{8.4}{2} + 5.5\right)}{17.3 \times 17.3} \frac{X}{H} = 0.[illegible] \frac{[illegible]}{[illegible]}$$

[illegible]

[illegible] VII.

Sorbing layer.	[illegible] (max)	[illegible] (max)	$\frac{mV}{e}$	[illegible]	$\frac{e}{m}$
[illegible]	-	-	1.5[illegible]x10[illegible]	-	-
paper	[illegible]x10[illegible]	[illegible]	1.8[illegible]	[illegible]x10[illegible]	1.[illegible]x10[illegible]
1[illegible] "	7.5 "	17	1.97	[illegible] "	1.[illegible] "
2[illegible] "	[illegible].5	1[illegible]	[illegible]	[illegible]	1.1[illegible] "
20 "	[illegible] "	[illegible]	[illegible]	[illegible]	1.[illegible] "

$\frac{e}{m}$

$\frac{e}{m}$

e
m

[illegible] $\frac{e}{m}$ [illegible]

[illegible]

[illegible] $\frac{e}{m}$ [illegible]

[illegible] $\frac{e}{m}$ [illegible]

[illegible]

[illegible]

[illegible]

[illegible]
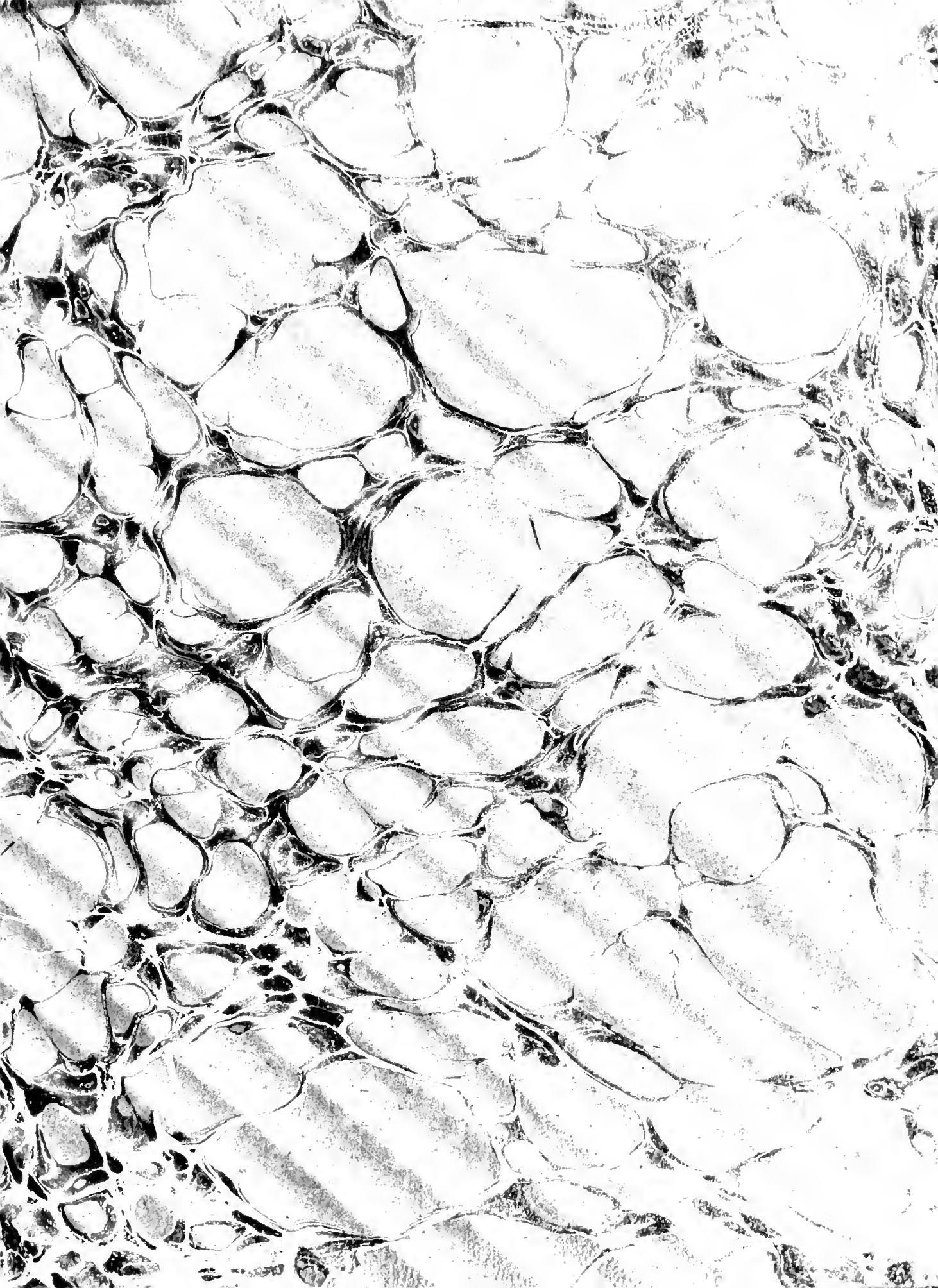
[illegible]